19.Headlight System

A: WIRING DIAGRAM

1. MODELS WITHOUT HID

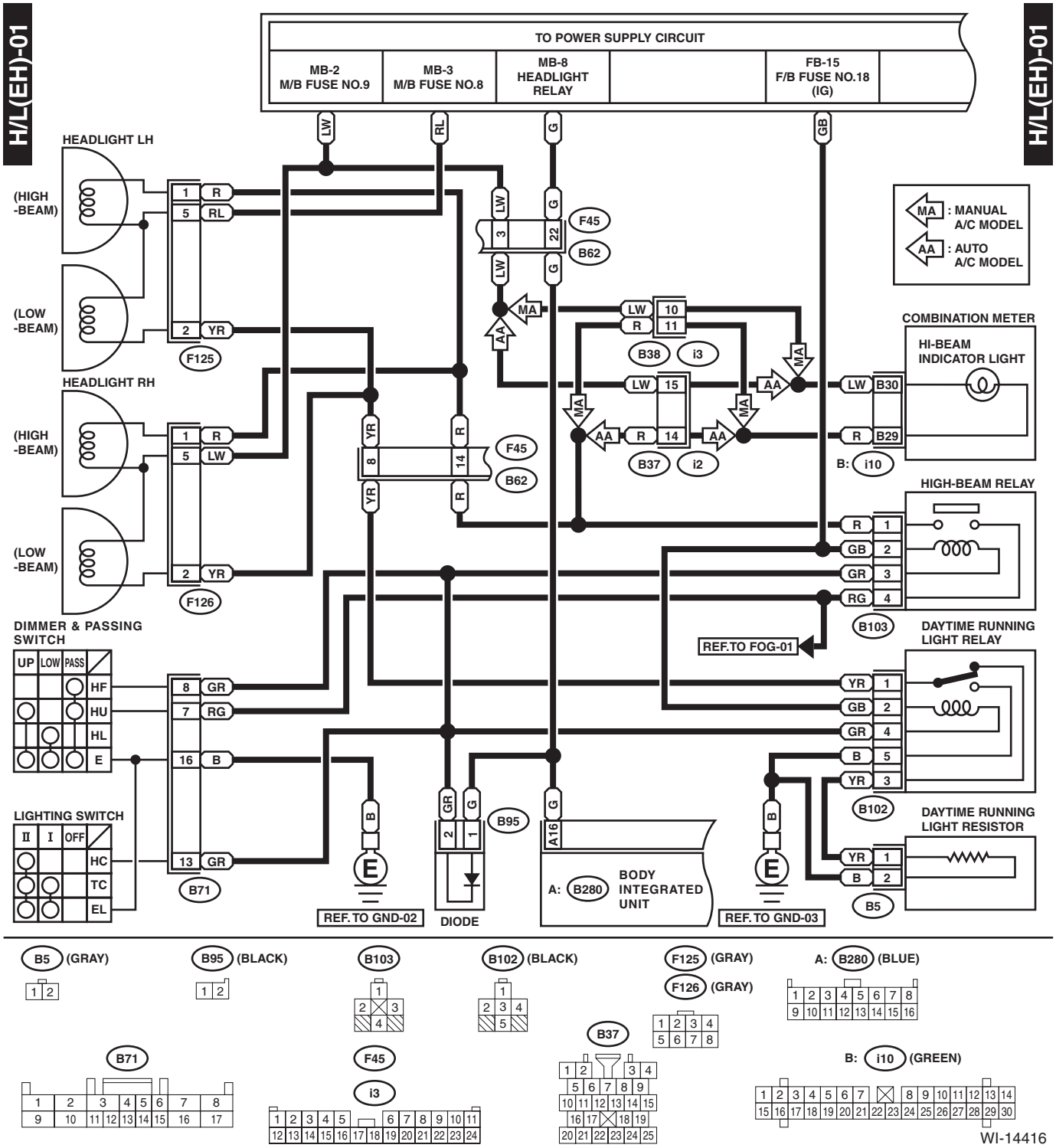

WIRING SYSTEM

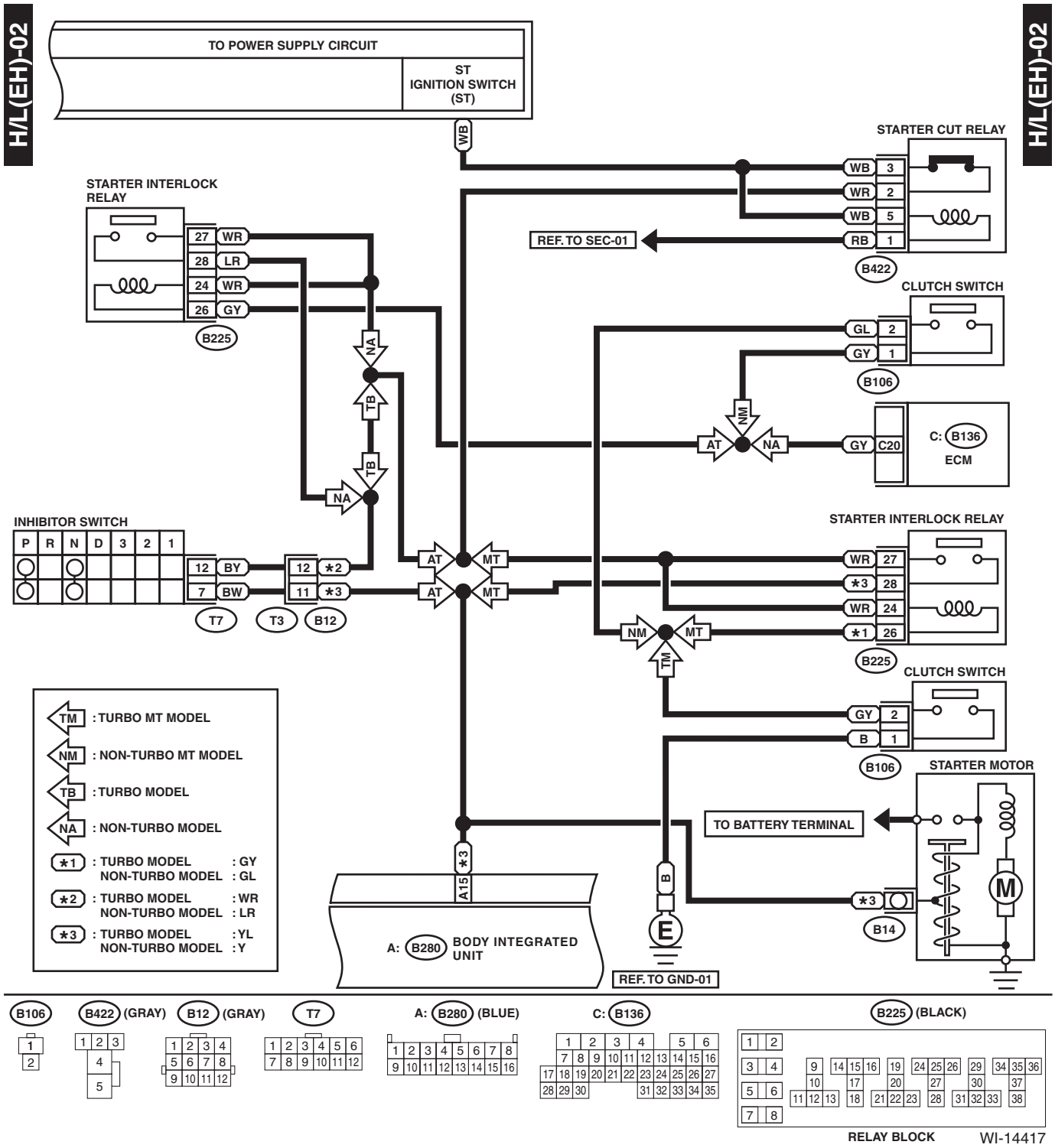

H/L(EH)-03

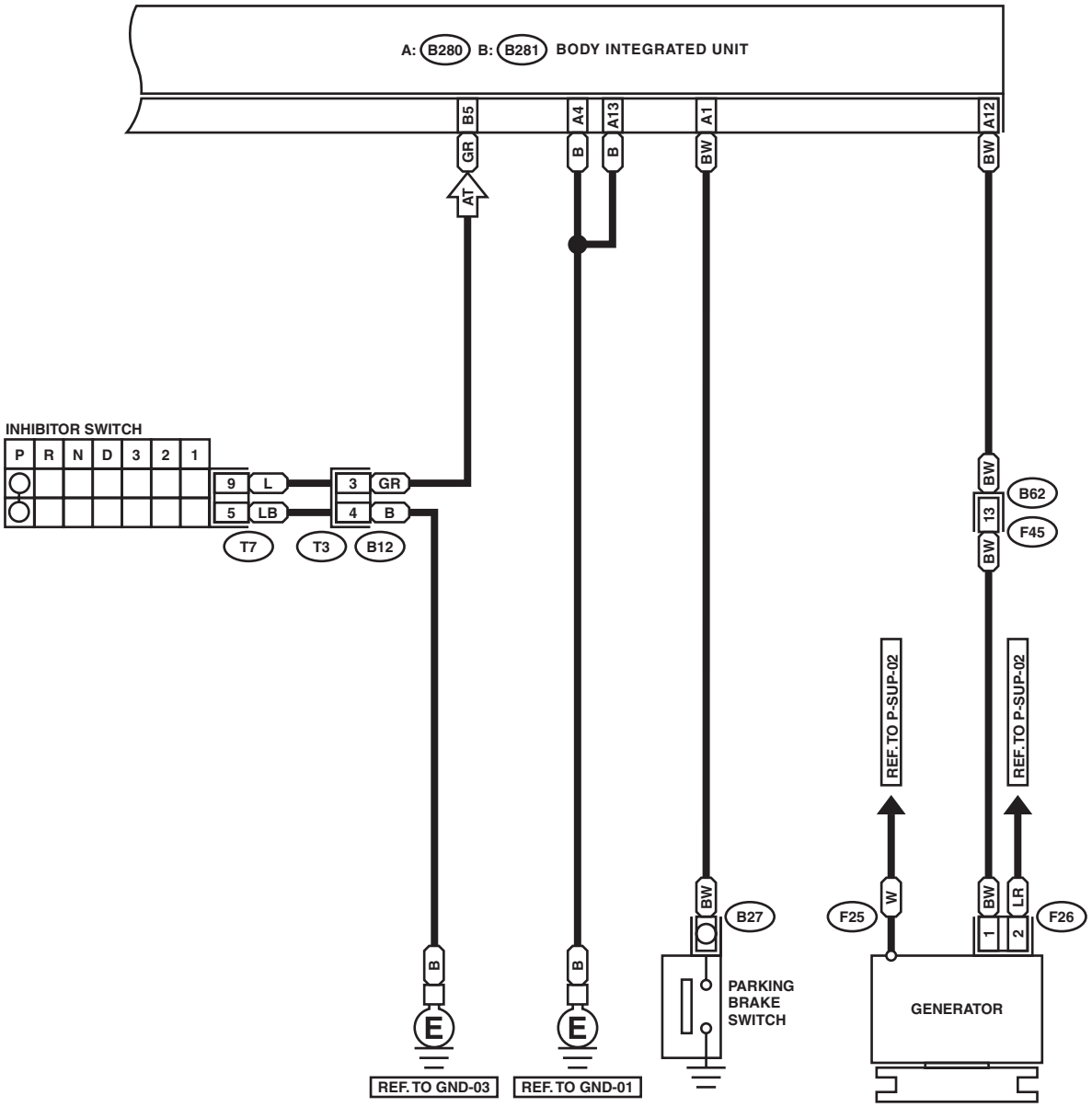

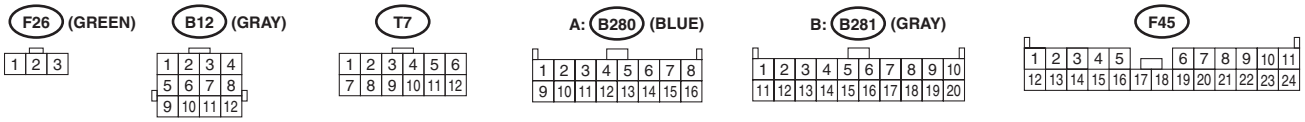

WI-14418

2. MODELS WITH HID

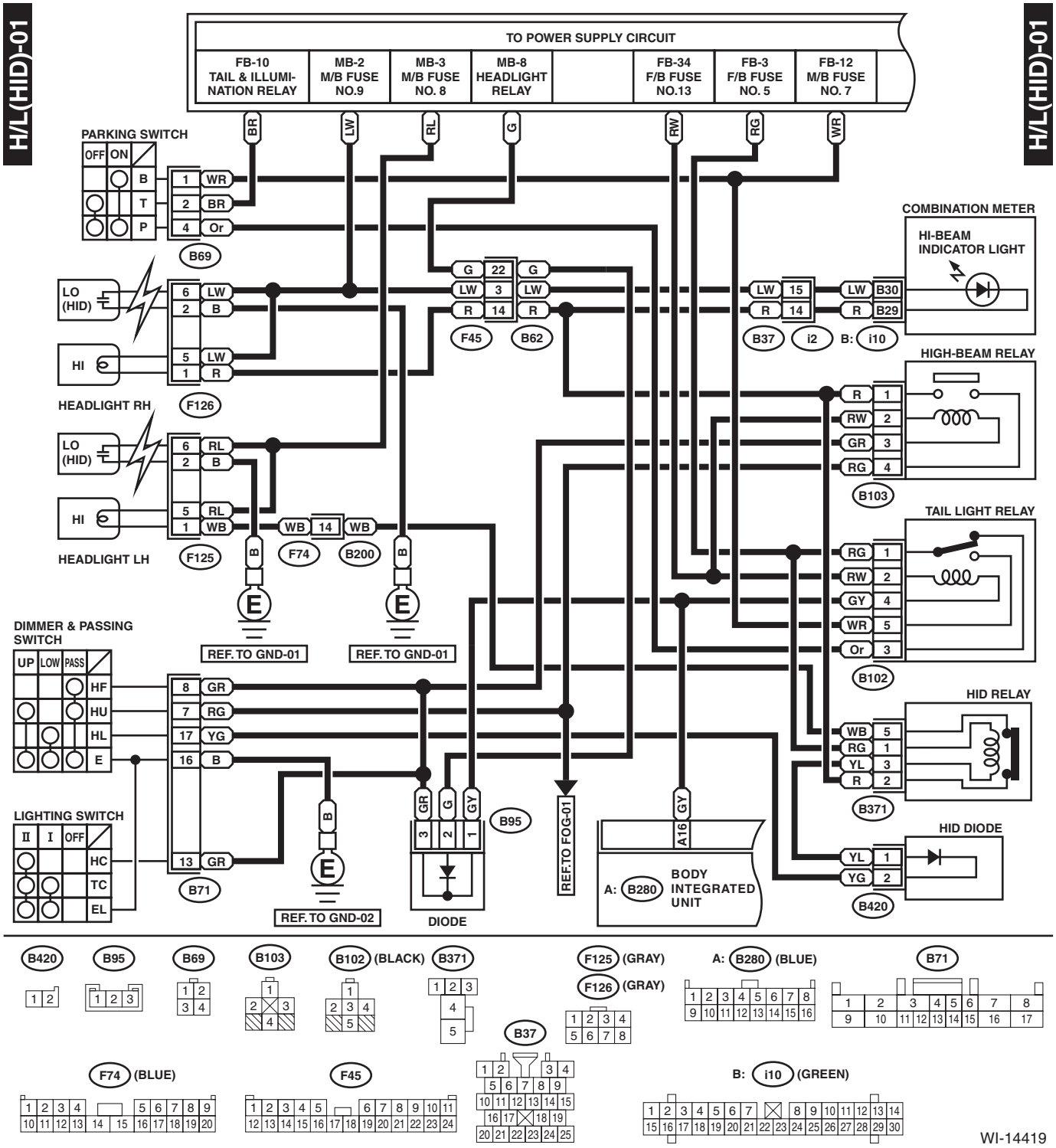

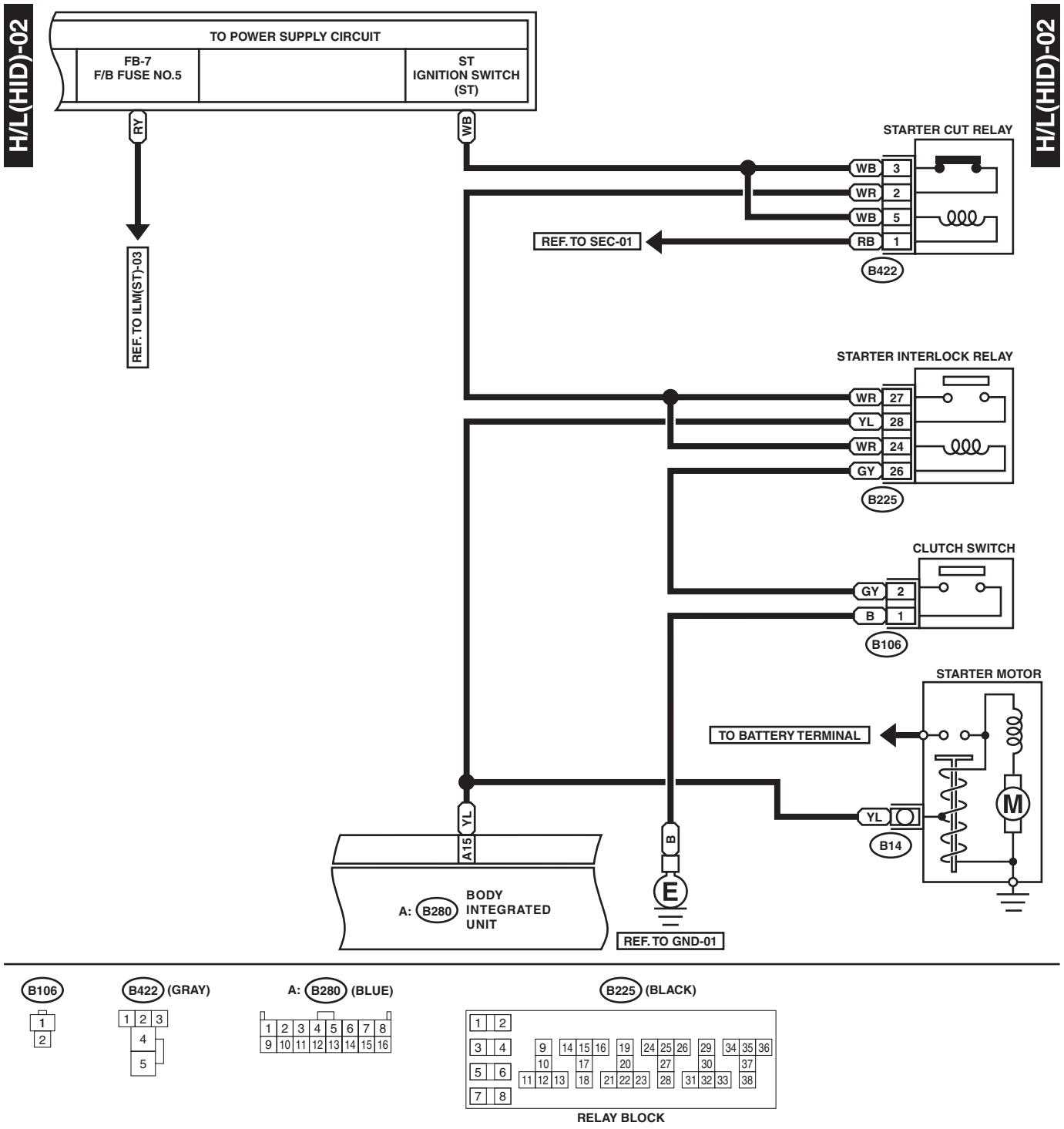
H/L(HID)-02
TO POWER SUPPLY CIRCUIT
FB-7
F/B FUSE NO.5
ST
IGNITION SWITCH
(ST)
RY
WB
REF. TO ILM(ST)-03
STARTER CUT RELAY
WB 3
WR 2
WB 5
RB 1
REF. TO SEC-01
B422
STARTER INTERLOCK RELAY
WR 27
YL 28
WR 24
GY 26
B225
CLUTCH SWITCH
GY 2
B 1
B106
STARTER MOTOR
TO BATTERY TERMINAL
M
YL
B14
YL
A15
B
E
A: B280
BODY
INTEGRATED
UNIT
REF. TO GND-01
B106
B422 (GRAY)
A: B280 (BLUE)
B225 (BLACK)
RELAY BLOCK

WI-14420

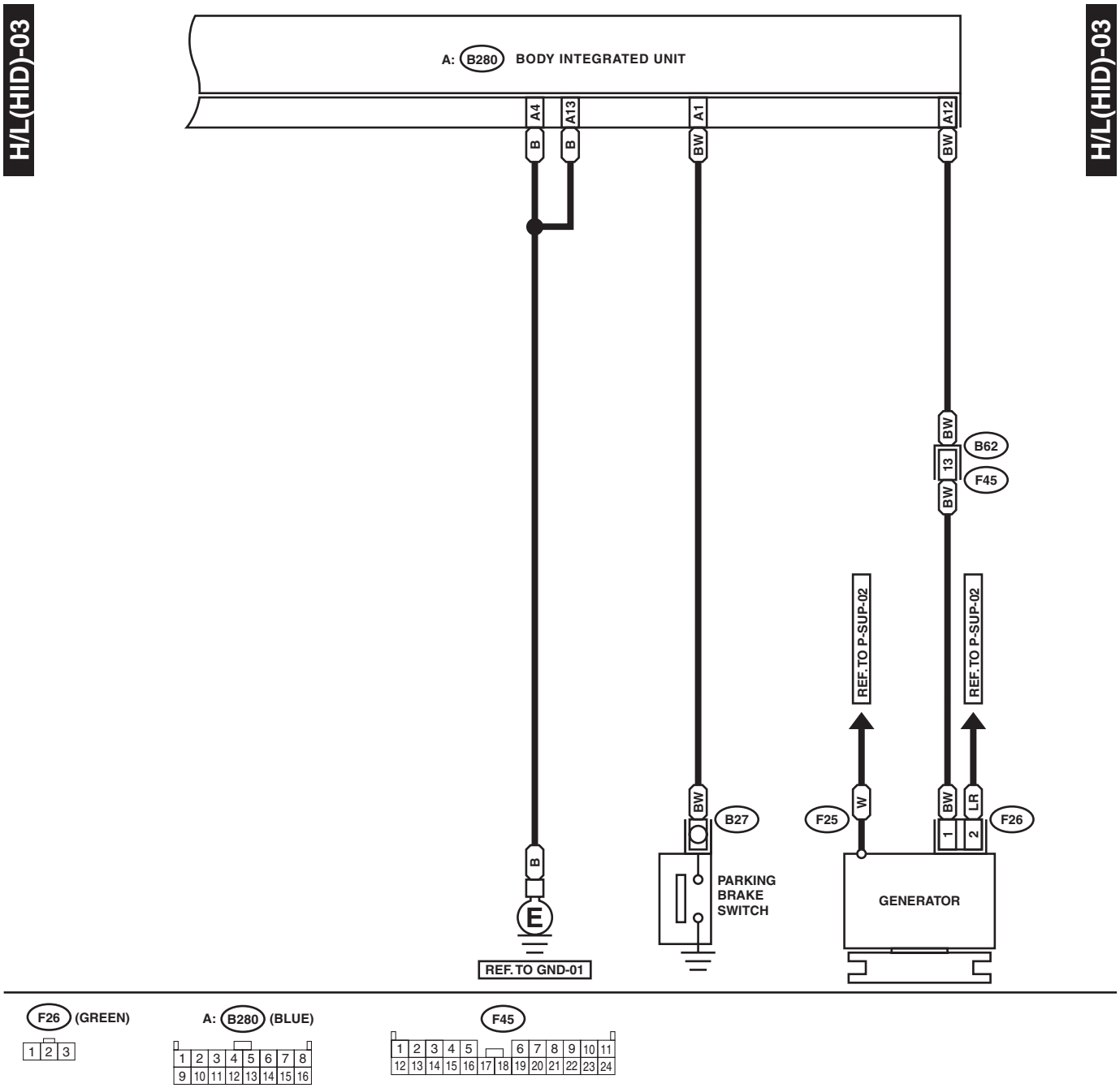
H/L(HID)-03
H/L(HID)-03
A: B280 BODY INTEGRATED UNIT
A4
A13
A1
A12
B
B
BW
BW
BW
B62
13
F45
BW
REF. TO P-SUP-02
REF. TO P-SUP-02
BW
B27
F25
W
BW
LR
F26
1
2
B
E
PARKING
BRAKE
SWITCH
GENERATOR
REF. TO GND-01

F26 (GREEN)
1 2 3
A: B280 (BLUE)
1 2 3 4 5 6 7 8
9 10 11 12 13 14 15 16
F45
1 2 3 4 5 6 7 8 9 10 11
12 13 14 15 16 17 18 19 20 21 22 23 24

WI-14421